Journal of Environmental Health and Sustainable Development

# Modeling and Performance of Waste Tires as Media in Fixed Bed Sequence Batch Reactor

*Zahra Derakhshan [1], Mohammad Faramarzian [2]*, Mohammad Taghi Ghaneian [1], Mohammad Hassan Ehrampoush [1]*

[1] *Environmental Science and Technology Research Center, Department of Environmental Health Engineering, School of Public Health, Shahid Sadoughi University of Medical Sciences, Yazd, Iran.*
[2] *Department of Environmental Health Engineering, School of Health, Shiraz University of Medical Sciences, Shiraz, Iran.*

***ARTICLE INFO***

***ORIGINAL ARTICLE***

***Article History:***
*Received: 29 May 2016*
*Accepted: 1 September 2016*

****Corresponding Author:***
*Mohammad Faramarzian*

*Email:*
*Mfaramarzi1985@gmail.com*

*Tel:*
*+989357579258*

***Keywords:***
*Modeling,*
*Biological,*
*Wastewater,*
*Treatment,*
*Waste Tire.*

***ABSTRACT***

***Introduction:*** The modeling aims to simulate or optimize a process in physical, chemical or biological environments and the derived model will provide a considerable assistance to generate data and predict unknown condition, in case of sufficient suitability. Unsuitable disposal and elimination of waste tires have polluted the environment and human life areas, it also have caused removal of a huge amount of recyclable materials and energy. Besides, attached growth biological processes of wastewater treatment are faced with very high costs of the beds used in such methods. Thus, this study targeted at the following topics: reuse of waste tires, reduction of the costs associated with preparation of biological wastewater treatment system beds, and increased productivity of refineries.

***Materials and Methods***: The current experimental study was conducted in pilot scale, in which ability of Fixed Bed Sequence Batch Reactor (FBSBR) and Sequencing Batch Reactor (SBR) was evaluated by synthetic wastewater in diverse loadings. Ultimately, the derived data were analyzed using the statistical software packages SPSS and MS Excel.

***Results*:** The maximum removal efficiencies of dissolved chemical oxygen demand for FBSBR and SBR reactors were 98.3 % and 97.9 %, respectively. In addition, Stover-Kincannon model provided a very suitable fitness ($R^2$ > 0.99) for loading the bioreactor FBSBR.

***Conclusion*:** According to the results, not only waste tires can be reused, but also these wastes can be employed as a proper biological bed in wastewater refineries to improve their efficiency.

***Citation:*** Derakhshan Z, Faramarzian M, Ghaneian MT, et al. **Modeling and Performance of Waste Tires as Media in Fixed Bed Sequence Batch Reactor.** J Environ Health Sustain Dev. 2016; 1(3): 159-66.

## Introduction

Due to the increased number of motor vehicles, the waste tires have been considerably increased in some countries. According to the experts' opinion, about 10 million rings of waste tires are produced annually in Iran [1]. In appropriate disposal and elimination of waste tires have resulted in pollution and thus are considered as a threat for the environment. They have also caused large amounts of discharged renewable materials and energy [2]. Waste tires have caused many problems including decrease of environmental beauties, reduction of landfill sites, creation of suitable places for growth and reproduction of insects and vermin having ignition potential which results in water, soil, and air pollution [3].

FBSBR (Fixed Bed Sequence Batch Reactor) reactor is actually a SBR-type hybrid reactor in which fixed film and activated sludge are concurrently used. Dual function of such reactors



[ DOR: 20.1001.1.24766267.2016.1.3.6.7 ]

is in such a way that the active biomass partly attached to the reactor removes suspended solids. Following increased microbial layer in this system, the efficiency will be improved, as well. Ultimately, the microbial layer gets so thick that a part of the sludge layer gets partly anaerobic and microbial layer starts to fall. In this system, the beds should be highly strong and posses high specific surface, they also should be cost-effective [4]. Azimi et al, concluded that hybrid processes can be considered as inexpensive solutions to enhance wastewater refineries efficiency to increase capacity of organic loading removal rate, nitrification, de-nitrification, and phosphorus removal [5]. Ye et al, found that the hybrid system with sheet bed is able to make the concentration of wastewater ammonia to reach the discharge standard valid limit seven in conditions three times higher than design conditions. In low operational temperatures, this system is like the conventional activated sludge process and no special attention is required to be paid for operation. Furthermore, this system minimizes growth of filamentous bacteria, leads to improvement of solids deposition process, enhances efficiency of stilling basins, optimizes biological reaction rates, and saves energy [6]. Gieseke et al. , concluded that an effective concurrent removal of phosphorous and nitrogen can be observed in a hybrid reactor with a film of plastic parts in biofilm batch reactor [7].

One of the problems in attached and hybrid growth processes for wastewater treatment is very high costs of the films and media applied in such methods. Present study not only aims to reuse waste tires to recover energy and materials, prevent environmental pollution, and decrease landfills life and increase wastewater treatment rate, but also it tries to present models for FBSBR Reactors' design and operation. Also, disposal of excess sludge from wastewater treatment is considered as a requirement for a wastewater refinery and this issue includes a major part of a wastewater refinery costs. Therefore, it is necessary to present accurate solution for reduction of wastewater refineries' sludge. Therefore, a special attention should be paid to this issue and in doing so, sludge reduction was evaluated here, as well [4].

## Materials and Methods

### *Preparation of biological media*

Initially, waste tires' parts were measured by a ruler and a scale in order to find their mean size and weight. In order to assess physicochemical properties and chemical resistance of the mentioned film, the rubber parts inside the dish were maintained in acidic conditions (pH of 4.9) and basic conditions (pH of 9.2) for 30 days. The acnes were removed from the solution and were distilled twice by the distilled water. Then, they were dried in the oven in a temperature of 60°C for 24 hours and stored in a desiccator for cooling. Next, they were measured twice by ruler and scale. Finally, weight reductions in acidic and alkaline conditions were 1.8 % and 2.5 %, respectively [8].

### *Setting up and operation of bioreactor*

As it can be seen from figure 1, our experimental reactor was composed of a FBSBR with Plexiglas materials. Its most important physical properties included a height of 60 cm, internal opening diameter of 10 cm, and total volume of 4.7 L. The replaceable volume of this system was 1.5 L. The type of media used in the present study was waste tire parts with major properties including porosity of 90 %, approximate specific surface of 370 $m^2/m^3$, and a total volume of 2 L. The mentioned reactor was filled up to height of 25 cm with the prepared media, then, this area was separated from up-side down dome diffusers by a Plexiglas mesh. Two dome diffusers were applied in this bioreactor. A free surface of 5 cm and a drain valve at a distance of 2 cm from the bottom of the bioreactor was used for probable discharge of accumulated sludge. In order to prevent interventional effects of light and growth of algae, the external wall of reactor was covered by foil. Furthermore, in order to increase accuracy and performance of the mentioned innovational biological film and also removal of intervening factors, a control pilot was used without biological bed (SBR) in quite equal conditions with all physical properties of the main pilot.



[ DOR: 20.1001.1.24766267.2016.1.3.6.7 ]

Upon preparation and installation of the reactor, to set up the system and launching biological adaptation stage, the filter column was applied in an approximate volume of 1 L for pilot as seed by using the aerobic bacteria collected from Yazd urban wastewater treatment with no operation problem including bulking, rising, and pinpoint phenomena; the remained space inside the bioreactor was filled by the synthetic wastewater made with a Chemical Oxygen Demand (COD) of 10,000 mg/L. After incubation stage, air compressor (blower) was turned on and the reactor started to work in batch mode.

In order to produce synthetic wastewater for microbial adaptation stage, a mixture of sucrose (8-6 gr/L), ammonium phosphate (6-3 gr/L), and sodium bicarbonate of 0.5 mol/L were applied to enhance buffering power of wastewater, prevent variation of pH, and tap water. In order to provide optimal conditions for microorganisms' activity, pH was kept constant in neutral range (i.e., approximate pH of 7). Scanning Electron Microscope (SEM) was used to assess growth of biofilm on rubber bed. At the end of the 3rd week, biofilm was completely formed on acnes. It is noteworthy to mention that temperature, pH, and dissolved oxygen amount were measured as 32 °C, 7.5 ± 0.2, and 4.8 ± 0.4 mg/L, respectively within this period. After formation of biofilm on biological bed, the operation stage started while according to the previous studies, each working cycle consisted of 4 steps including: 1) Feeding: the required time for this step was considered 15 minutes; 2) Aeration (Hydraulic retention time): the times 165 (2:45°), 285 (4:45°), 405 (6:45°) and 525 (8:45°) minutes were considered in this stage; 3) Sedimentation: a time of 45 minutes was granted to the suspended materials inside the reactor to be deposited; and 4) Discharge: the purified wastewater was discharged from mentioned reactor in 15 minutes. In order to produce synthetic wastewater for operation stage, the nutrients whose compositions are mentioned in Table 1 were used [4, 9]. The produced wastewater was stored in a tank. Although constituents of synthetic wastewater were completely dissolved in water, for more confidence and to prevent wastewater quality from change due to storage, a small submersible pump which rotated the whole sewage every 15 minutes was applied to return wastewater from bottom to the tank surface. Temperature of the synthetic wastewater generated inside the feeding tank was controlled by an electrical heater at about 30 °C [10- 13]. In this study, in order to assess ability of bioreactors to remove pollutants, 4 different concentrations of SCOD including 500, 1000, 1500, and 2000 mg/L were evaluated. In order to be sure about stability of reactor in variations of influent contaminant concentration changes and hydraulic retention time, samples were taken from the effluent COD of reactor till it remained constant. To ensure more about stability of Dissolved Oxygen (DO) inside the reactor, the ambient air's temperature and pH were measured daily during the operational period. Early strength of wastewater was specified by the COD test according to the methods mentioned in the *standard methods for the examination of water and wastewater* book [14]. The sampling was carried out regularly at the end of each operation cycle until the effluent solution COD concentration reached stability. After completion of operation stage, removal efficiencies of COD and VSS were determined by reactor. Upon providing the stability conditions at each period, sampling was done and parameters such as COD (by thermo-reactor model Aqualytic and the Spectrophotometer device model DR 2000), pH (by pH meter model Ohmetr), DO (by Do-meter model HACH), temperature (by thermometer), and VSS were examined. Within each step, sampling was conducted from the two influent and effluent points of reactor and the tests were carried out at least twice for more precision and accuracy. Next, the average scores of results were calculated. Sampling method and tests' implementation were conducted according to the guidance of *standard methods for the examination of water and wastewater* book [14]. Finally, the SPSS and MS Excel software packages were used to obtain mathematical models and determine effect of aeration time and influents COD concentration on removal of COD, MLSS, TSS, and VSS.



[ DOR: 20.1001.1.24766267.2016.1.3.6.7 ]

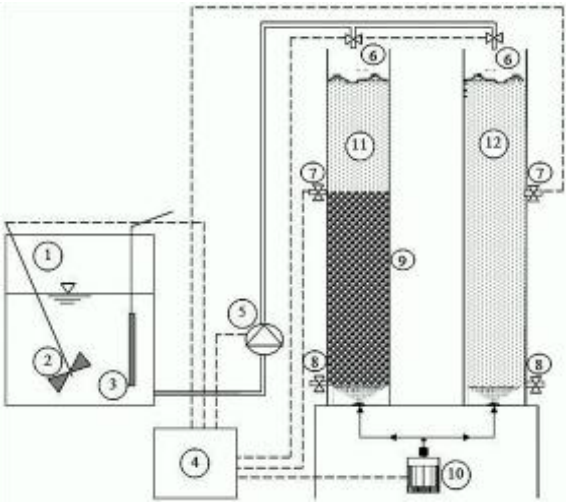

**Figure 1:** Schematic view of FBSBR and SBR bioreactors in pilot scale
1- Feed Tank, 2- Mixer, 3- Heater, 4- Control Unit, 5- Peristaltic Pump, 6- Feed Control Valve, 7- Decanter (Sampling) Valve, 8- Discharge Sludge Port, 9- Novel Packing Media, 10- Air compressor, 11- FBSBR Reactor, 12- SBR Reactor

**Table 1:** Composition of synthetic wastewater in operation stage (4)

| Compounds | Concentration range (mg/L) |
|---|---|
| NaCOOH | 100-200 |
| $(NH_4)_3SO_4$ | 150-700 |
| $KH_2PO_4$ | 150-600 |
| $CaCl_2.2H_2O$ | 0.37 |
| $MgSO_4.7H_2O$ | 5 |
| $MnCl_2.4H_2O$ | 0.28 |
| $ZnSO_4.7H_2O$ | 0.45 |
| $FeCl_3$ | 1.45 |
| $CuSO_4.5H_2O$ | 0.4 |
| $CoCl_2.6H_2O$ | 0.4 |
| $Na_2MoO_4.2H_2O$ | 1.25 |
| $NaHCO_3$ | 20 |
| Sucrose (sugar) | 100-800 |

## Results

At the first step, the 10-hour operation cycle and then the cycles 8, 6, and 4-hour cycles were evaluated. COD, TSS, and VSS were the most important parameters in tests. For summarization and better explanation, results derived from operated bioreactors are presented through the following tables and figures.

### *Statistical analysis*

Standard statistical parameters applied in the current study included mean, standard deviation, and Mann-Whitney non-parametric test. They were employed to assess the statistical relation between the two reactors using the SPSS software package (V. 22). In doing so, the obtained results are presented in table 2.

**Table 2:** Statistical comparison of the bioreactors

| Parameter | COD | SVI | Yield ($Y_{obs}$) | VSS/TSS |
|---|---|---|---|---|
| Sig. two | 0.02 | 0.13 | < 0.01 | 0.03 |

The significance level (two-tailed) to determine the association is equal to 0.05



[ DOR: 20.1001.1.24766267.2016.1.3.6.7 ]

***Results of bioreactors' COD effluent***

Figure 2 and 3 portray the effluent solution's COD results of the mentioned bioreactors in different modes. Table 3 reports the VSS/TSS ratio and removal efficiency of COD solution in diverse loadings.

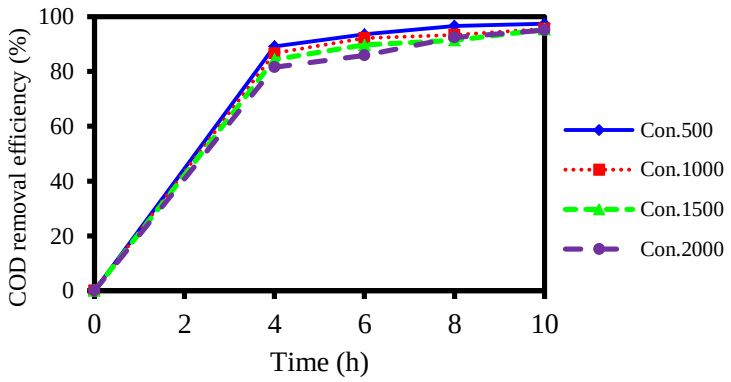


**Figure 2:** Removal trend of COD in FBSBR bioreactor

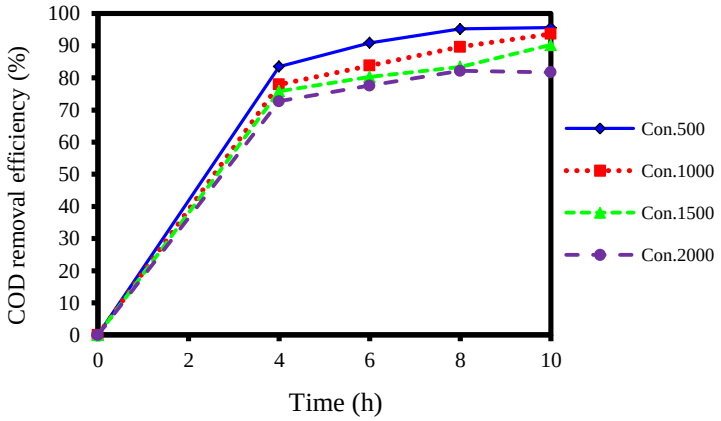


**Figure 3:** Removal trend of COD in SBR bioreactor

**Table 3:** Comparison of FBSBR and SBR reactors' efficiencies in COD and VSS/TSS removal

| Volumetric organic loading ($kg_{COD}/m^3.d$) | COD removal efficiency (%) | | VSS/TSS | |
|---|---|---|---|---|
| | FBSBR | SBR | FBSBR | SBR |
| 0.58 | 96.5 | 95.9 | 0.64 | 0.67 |
| 0.76 | 96 | 95.1 | 0.65 | 0.7 |
| 1.08 | 92 | 91 | 0.66 | 0.72 |
| 1.17 | 94.3 | 93.6 | 0.69 | 0.73 |
| 1.52 | 92.1 | 90 | 0.69 | 0.74 |
| 1.76 | 93.5 | 90.2 | 0.69 | 0.73 |
| 1.87 | 86.3 | 83.4 | 0.71 | 0.77 |
| 2.16 | 88 | 83.9 | 0.71 | 0.78 |
| 2.28 | 87.9 | 83.5 | 0.71 | 0.78 |
| 2.35 | 87.8 | 82.9 | 0.72 | 0.75 |
| 3.04 | 87.3 | 82.1 | 0.73 | 0.8 |
| 3.24 | 85.8 | 80.4 | 0.73 | 0.81 |
| 3.74 | 83.5 | 78 | 0.74 | 0.79 |
| 4.33 | 83.2 | 77.5 | 0.78 | 0.82 |
| 5.61 | 81.9 | 75.7 | 0.81 | 0.86 |
| 7.48 | 80.2 | 72.8 | 0.83 | 0.89 |



[ DOR: 20.1001.1.24766267.2016.1.3.6.7 ]

***Process Modeling***

The design criteria for attached growth systems is the volumetric loading on the reactor area and organic material removal rate is derived from the hyperbolic relations such as Stover-Kincannon equation (Equation 1): [4, 9- 13, 15]

$$r_{SCOD} = r_{max}\frac{B_{SCOD}}{k+B_{SCOD}} \quad (1)$$

$r_{sCOD}$:organic material removal rate ($kg_{sCOD}/m^3d$)

$r_{max}$: the maximum of organic material removal rate

k: half of speed constant

$B_{sCOD}$: Organic material exerted on the bioreactor's volume unit

$B_{sCOD}$ and $r_{sCOD}$ can be found by the following equations:

$$B_{SCOD} = \frac{Q}{V}C_i \quad (2)$$

$$r_{SCOD} = \frac{Q}{V}(C_i - C_e) \quad (3)$$

Using Equations 2 and 3, the amount of $r_{sCOD}$ can be derived for different operation modes. Each reactor has a limited final power at volumetric loading which is independent from hydraulic retention time and such a final power is defined as $r_{max}$. Using the software Curve Expert, the coefficients of k and $r_{max}$ can be extracted. Values of these coefficients and correlation coefficients ($R^2$) are tabulated in Table 4.

**Table 4:** The k and $r_{max}$ constants in bioreactors at stable mode and temperature of 30°C

| Reactor | Correlation coefficient ($R^2$) | Standard error (SE) | Maximum rate of organic material removal in terms of $kg_{COD}/m^3d$ | The half of speed constant (k) in $kg_{COD}/m^3d$ |
|---|---|---|---|---|
| FBSBR | 0.996 | 0.12 | 5.88 | 2.39 |
| SBR | 0.99 | 0.17 | 5.59 | 2.60 |

Figure 4 shows the loading curve of organic material on the mentioned bioreactors.

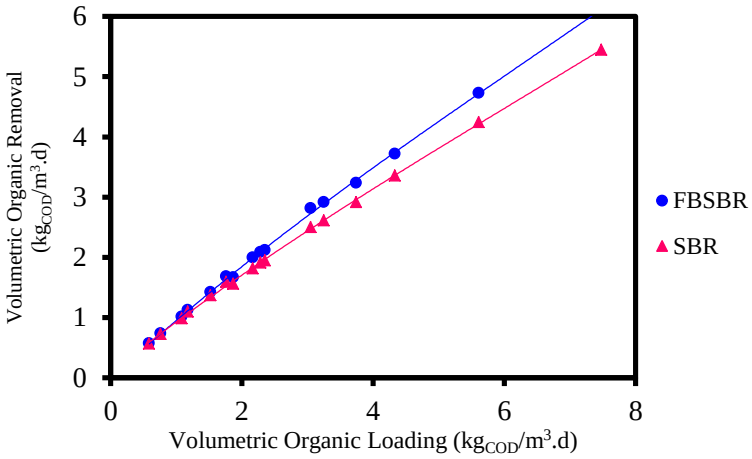


**Figure 4:** Organic loading of bioreactors in the 0-8 kg $_{COD}/m^3$.d range at temperature of 30°C

## Discussion

According to the diagrams 2-4, it is deduced that both reactors investigated in this study have high ability for removal of organic compounds from wastewater and no significant difference exists between these two systems at low loadings. However, in high loadings, the FBSBR reactor shows a better efficiency compared to the SBR reactor (p-value = 0.023). This result shows that microorganisms in biofilm along with the suspended growth microorganism in the FBSBR reactor have higher potential and strength for removal of organic carbon at loadings and also more resistance against shock compared to the SBR reactor. This is resulted from higher contact of pollutants with microorganisms. In a study, Sirianuntapiboon et al, concluded that employment of attached growth systems in SBR systems can

enhance removal efficiency, improve the sludge quality, decrease excess biomass, and reduce microorganism adaptation period in these systems [16]. COD removal rate in the same operation conditions in such systems was about 5-7 % higher than conventional SBR systems that are consistent with results of present study.

Modeling of the data resulted from bioreactors is shown in figure 4. Given the diagrams and results of Table 4, the derived data has a very suitable fitness with Stover-Kincannon model ($R^2 > 99$ %). However, the FBSBR reactor has higher ability to remove organic compounds from aquatic environments. As a result, this pertains to biofilm growth on innovative biological bed.

Statistical analysis (Table 2) shows that sludge production factor ($Y_{obs}$) in FBSBR is considerably lower than that of SBR (p-value < 0.01). In other words, the FBSBR reactor produces less sludge compared to the SBR reactor due to higher microorganisms' cellular retention time in biofilm. Also, substrate and dissolved oxygen gradient cause the microorganisms inside the biofilm begin cannibal respiration which results in decreased excess sludge production.

According to Table 3 and the results from statistical analysis, VSS/TSS ratio in the bioreactor FBSBR is significantly lower than that of SBR reactor (p-value < 0.033). This may be arisen due to higher Solids Retention Time (SRT) in the FBSBR reactor compared to SBR one. The impact of SRT on the sludge stability and the inverse relationship of the ratio VSS/TSS to SRT were proved in previous studies and authoritative references. Consequently, results of present study are in line with those of previous ones.

## Conclusion

The results showed that waste tires have high capabilities to be applied as a biological bed in attached growth bioreactors. Adding such wastes as microorganisms carriers in biological systems increases efficiency and enhances refineries performance and removal of pollutants from aquatic environments. Although, both reactors showed a reasonable performance in organic pollutants removal, the FBSBR reactor had much higher efficiency in higher loadings compared to the SBR reactor. This may be considered due to presence of the attached growth and bed in such systems. Excess biological sludge production rate in the FBSBR reactor is about 13-29 % less than that of SBR reactor.

## Acknowledgements

Authors of the present paper are grateful to authorities of Shahid Saduoghi university of Medical Sciences, Yazd, Iran, as well as Ms. Afsaneh Keivan Shokouh's comments which improved the manuscript significantly.

## Funding

This study is founded by Shahid Sadoughi University of Medical Sciences and Health Services (Project No: 3612).

## Conflict of interest

We have no competing interests.



## References

1. Kiachehr B, Mohsen H, Mohsen E. Mechanical properties of waste ground tire rubberized concrete. Tehran: Iran National festival of concrete; 2009.[In persian]
2. Herrera-Sosa ES, Martínez-Barrera G, Barrera-Díaz C, et al. Recovery and modification of waste tire particles and their use as reinforcements of concrete. Int J Polym Sci. 2015.
3. Selbes M, Yilmaz O, Khan AA, et al. Leaching of DOC, DN, and inorganic constituents from scrap tires. Chemosphere. 2015; 139: 617-23.
4. Derakhshan Z, Ehrampoush MH, Mahvi AH, et al. Evaluation of volcanic pumice stone as media in fixed bed sequence batch reactor for atrazine removal from aquatic environments. Water Sci Technol. 2016:wst 2016424.
5. Azimi A, Hooshyari B, Mehrdadi N, et al. Enhanced COD and nutrient removal efficiency in



[ DOR: 20.1001.1.24766267.2016.1.3.6.7 ]

a hybrid integrated fixed film activated sludge process. Iranian Journal of Science & Technology, Transaction B, Engineering. 2007; 31(B5): 523-33.

6. Ye J, Chestna KL, Kulick FM, et al. Full scale implementation, operation, and performance of a structured sheet media IFAS system. Proceedings of the Water Environment Federation. 2010; (14): 2555-65.
7. Gieseke A, Arnz P, Amann R, et al. Simultaneous P and N removal in a sequencing batch biofilm reactor: insights from reactor-and microscale investigations. Water Res. 2002; 36(2): 501-9.
8. Natarajan R, Al-Sinani J, Viswanathan S. Performance evaluation and kinetic studies on removal of benzene in up-flow tree bark based biofilter. Chemical Industry and Chemical Engineering Quarterly. 2015; 21(4): 537-45.
9. Derakhshan Z, Baghapour MA, Nasseri S, et al. Performance evaluation submerged aerobic filter to remove atrazine from aqueous environments. Modares Civil Engineering Journal. 2015; 15(4): 21-30.
10. Baghapour MA, Nasseri S, Derakhshan Z. Atrazine removal from aqueous solutions using submerged biological aerated filter. J Enviro Health Sci Eng. 2013; 11(1): 1.
11. Baghapour MA, Shirdarreh MR, Derakhshan Z, et al. Modeling amoxicillin removal from aquatic environments in biofilters. Health Scope. 2014; 3(1): 22-8
12. Baghapour MA, Shirdarreh MR, Faramarzian M. Degradation of amoxicillin by bacterial consortium in a submerged biological aerated filter: volumetric removal modeling. Journal of Health Sciences and Surveillance System. 2014; 2(1): 15-25.
13. Baghapour MA, Shirdarreh MR, Faramarzian M. Amoxicillin removal from aqueous solutions using submerged biological aerated filter. Desalin Water Treat. 2015; 54(3): 790-801.
14. APHA. Standard methods for the examination of water and wastewater. Washington: American Public Health Association; 2005.
15. Nasseri S, Baghapour MA, Derakhshan Z, et al. Degradation of atrazine by microbial consortium in an anaerobic submerged biological filter. Journal of Water and Health. 2014; 12(3): 492-503.
16. Sirianuntapiboon S, Jeeyachok N, Larplai R. Sequencing batch reactor biofilm system for treatment of milk industry wastewater. J Environ Manage. 2005; 76(2): 177-83.



[ DOR: 20.1001.1.24766267.2016.1.3.6.7 ]